Dimensions

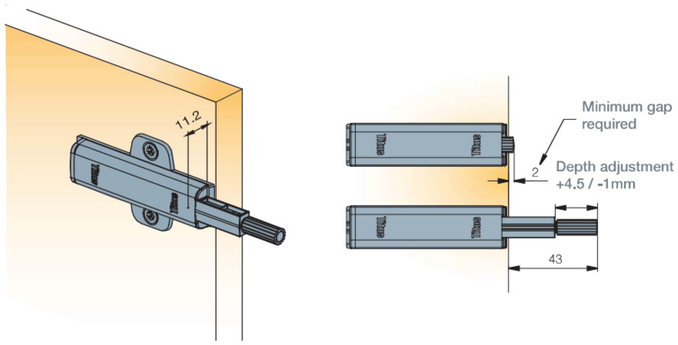

Cross mounting plate

Linear mounting plate

Drilling pattern

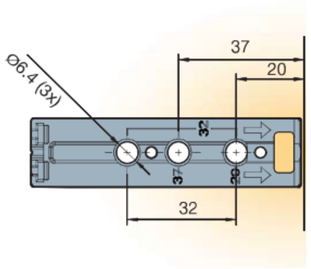

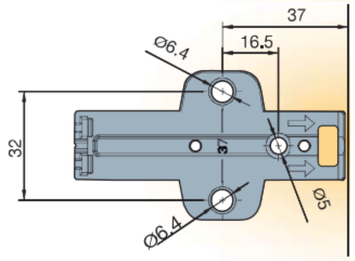

SJM DESIGNS
A: 8/1 Merchants PDE Marcoola Beach
M: 0429955366
E: sarahjeannie.98@gmail.com

NOTES

1. Confirm all dimensions and levels on site before commencing work
2. Figured dimensions shall take precedence over scaled dimensions

COPYRIGHT
Indetail Design ACN 000000000 All rights reserved. This work is covered by Copyright and cannot be reproduced or copied in any form or by
any means (graphic, electronic or mechanical photocopying) without the written permission of Indetail Desgin. Any licence, express or implied, to use this document for any purpose whatsoever is restricted to the terms of
the written agreement between Indetail Design and the instructing party.

NORTH

CLIENT
SCHÖN BEAUTY BAR

PROJECT
RECEPTION DESK

DRAWING TITLE
JOINERY

DRAWN SJM
CKD TQEC
SCALE

PROJECT J202/21
DRAWING NO WD704
ISSUE 2
SHEET A1
DATE 01/04/2021